APRS DB-25 HARDWARE 2nd PORT

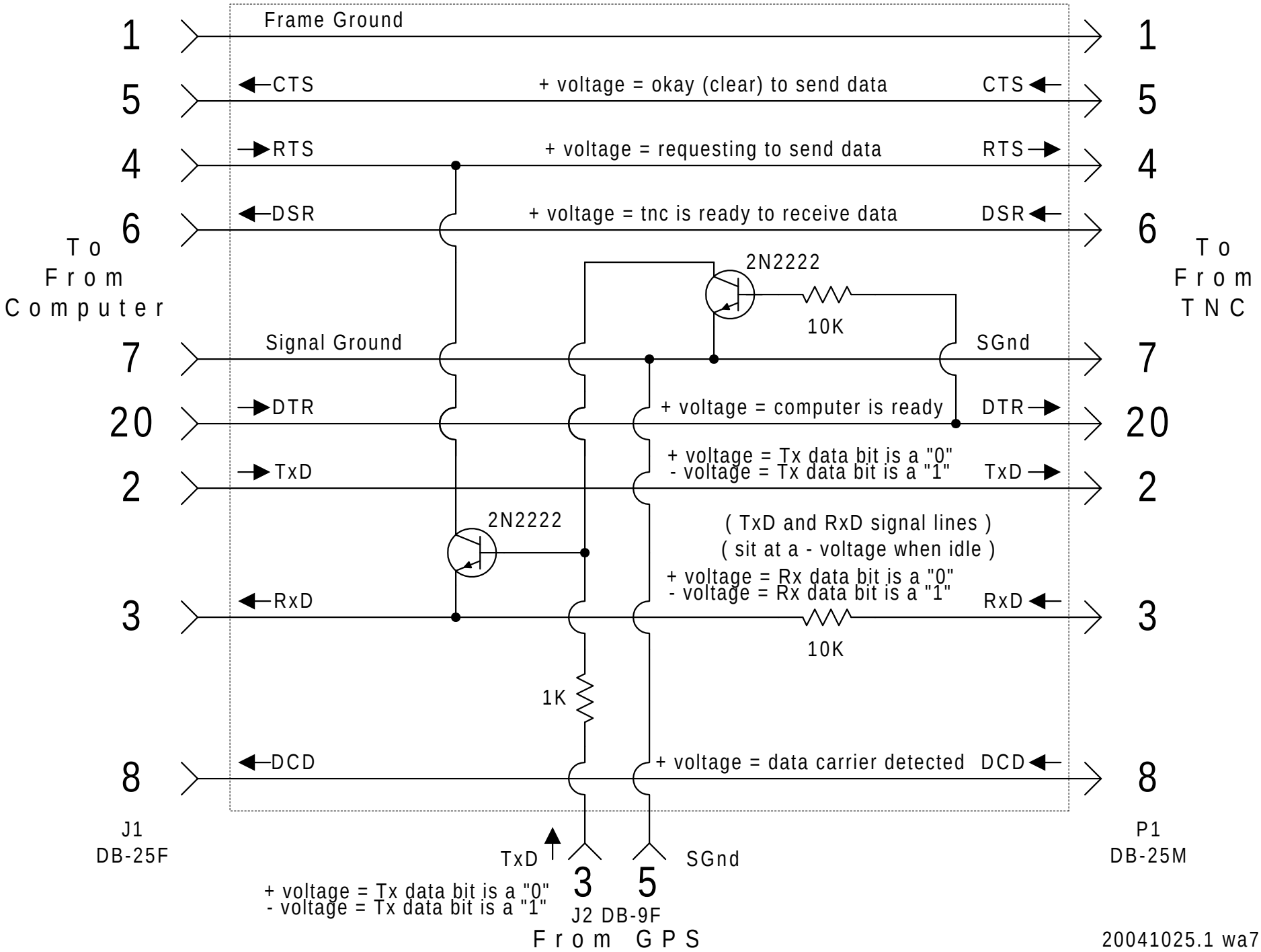

20041025.1 wa7zvy